1

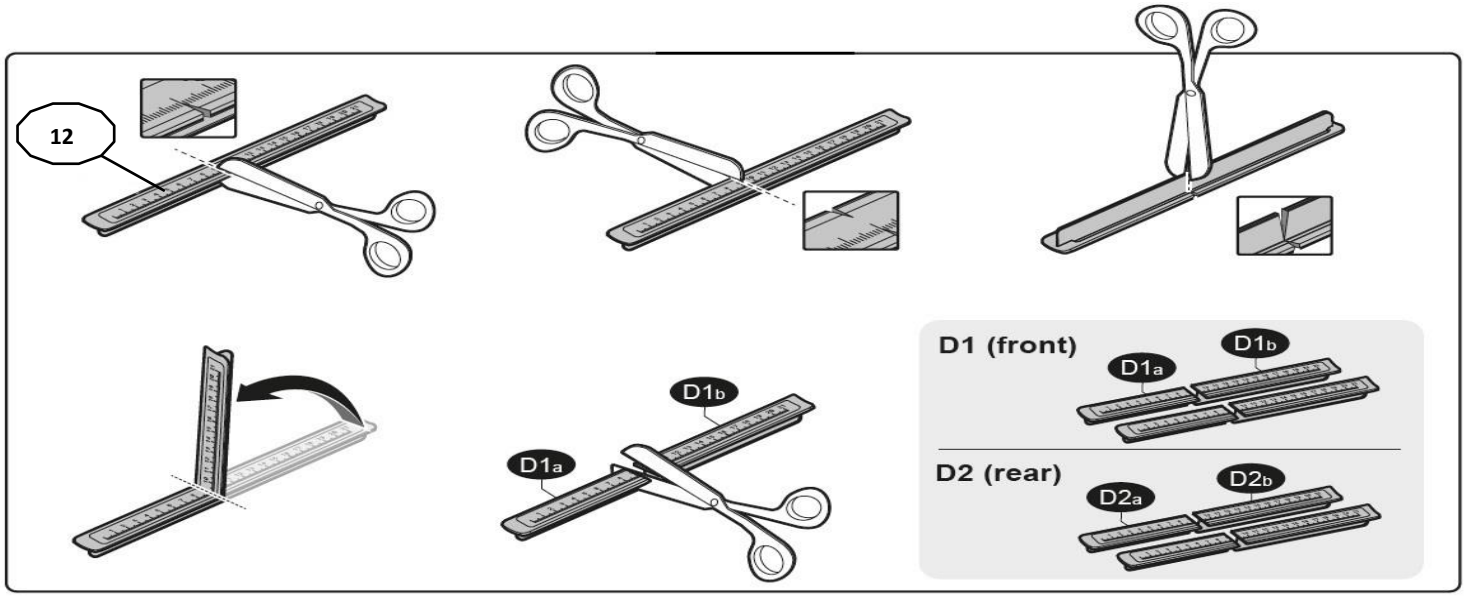

MANUFACTURER	MODEL CAR	DOORS	MODEL YEAR	D1	D2
TOYOTA	*Venza (AV10)*	*5*	*08>17*	*11,6*	*10,9*

2

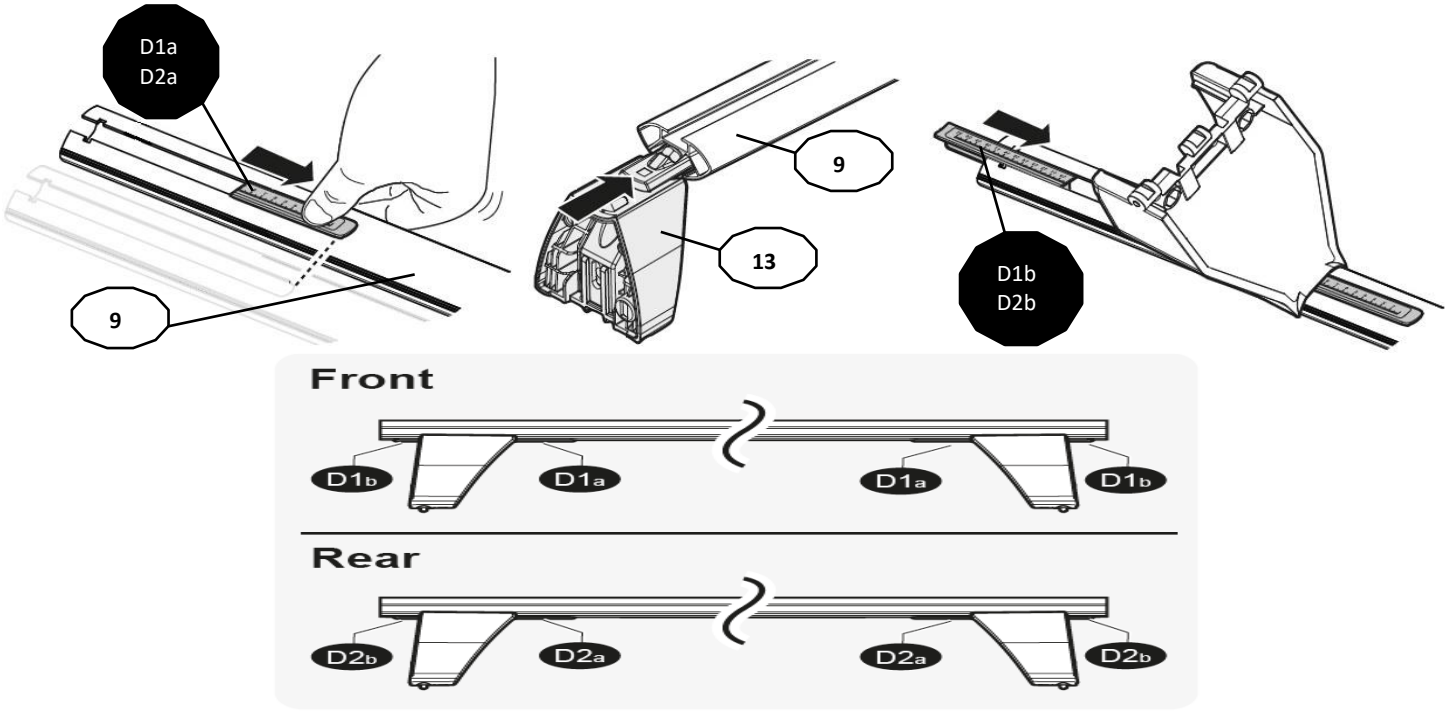

3

x4

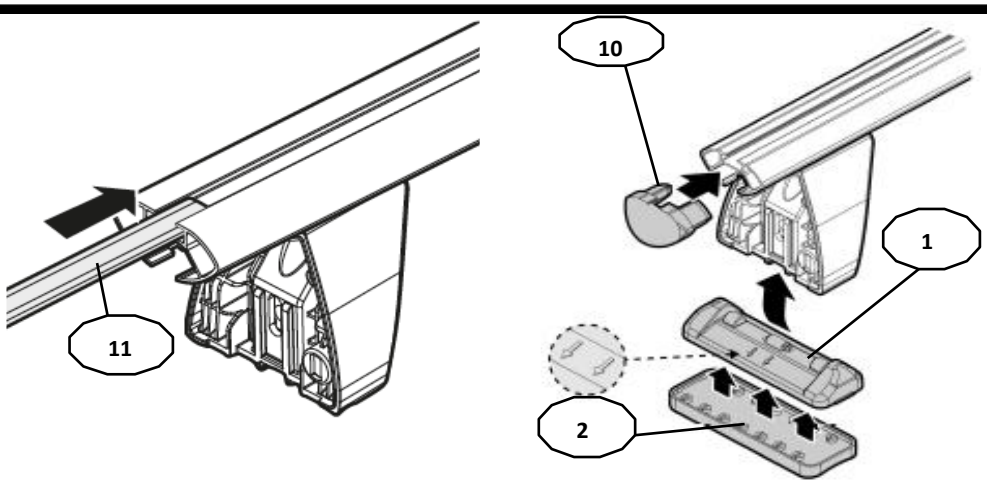

4

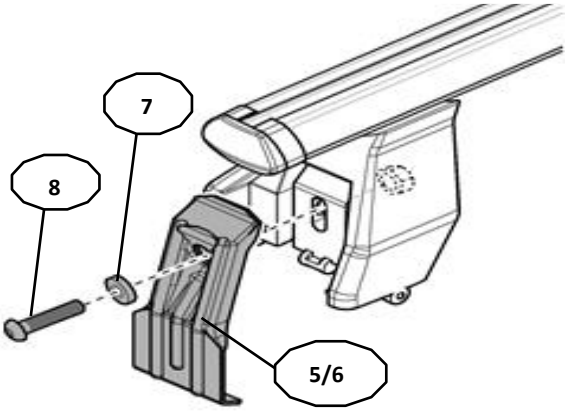

Front	Rear
5	6

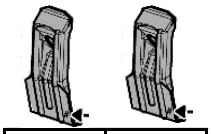

16	16
2X	2X

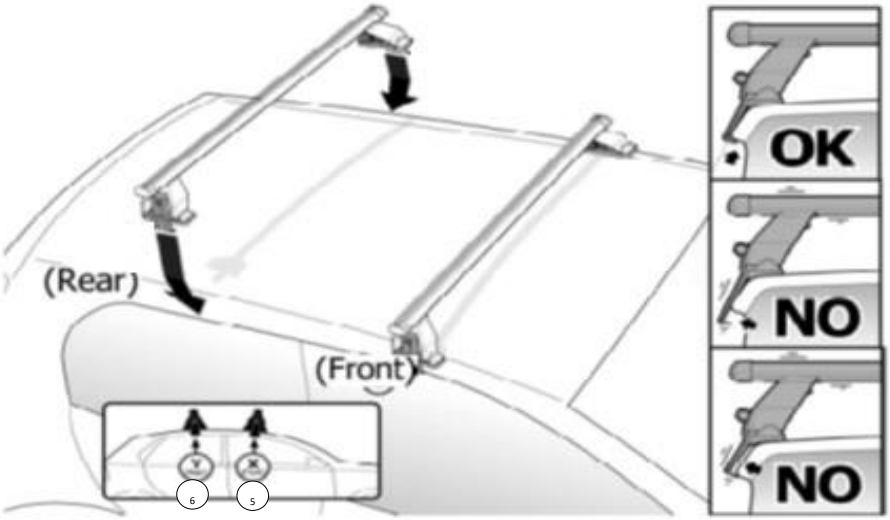

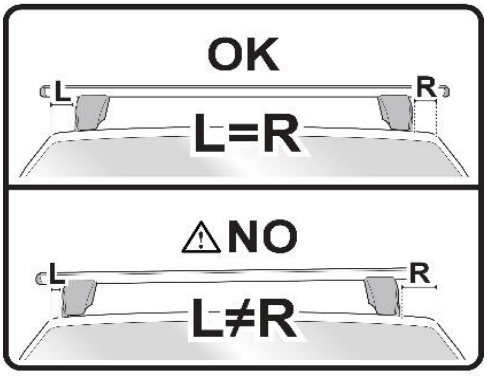

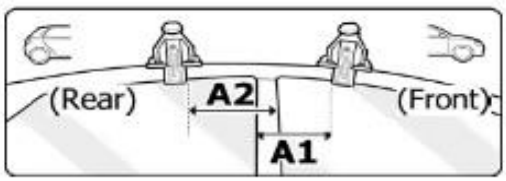

OR

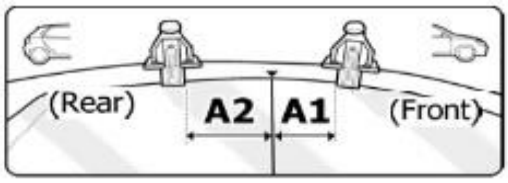

MANUFACTURER	MODEL CAR	DOORS	MODEL YEAR	A1 cm	A2 cm	A1 in	A2 in
TOYOTA	*Venza (AV10)*	*5*	*08>17*	*23*	*43*	*9,1*	*16,9*

X = predisposizione originale /original arrangement