1

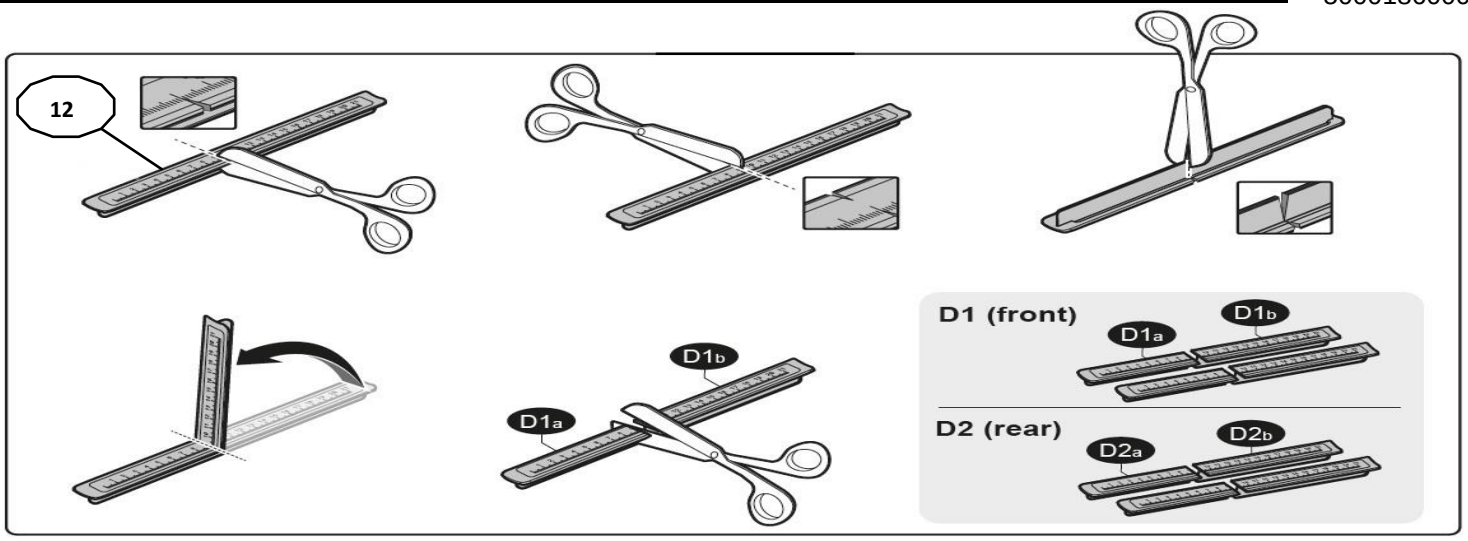

MANUFACTURER	MODEL CAR	DOORS	MODEL YEAR	D1	D2
ACURA	*TLX*	*4*	*15>19*	*6,0*	*5,0*
FORD	*Fiesta V*	*3*	*02>08*	*4,9*	*4,5*

2

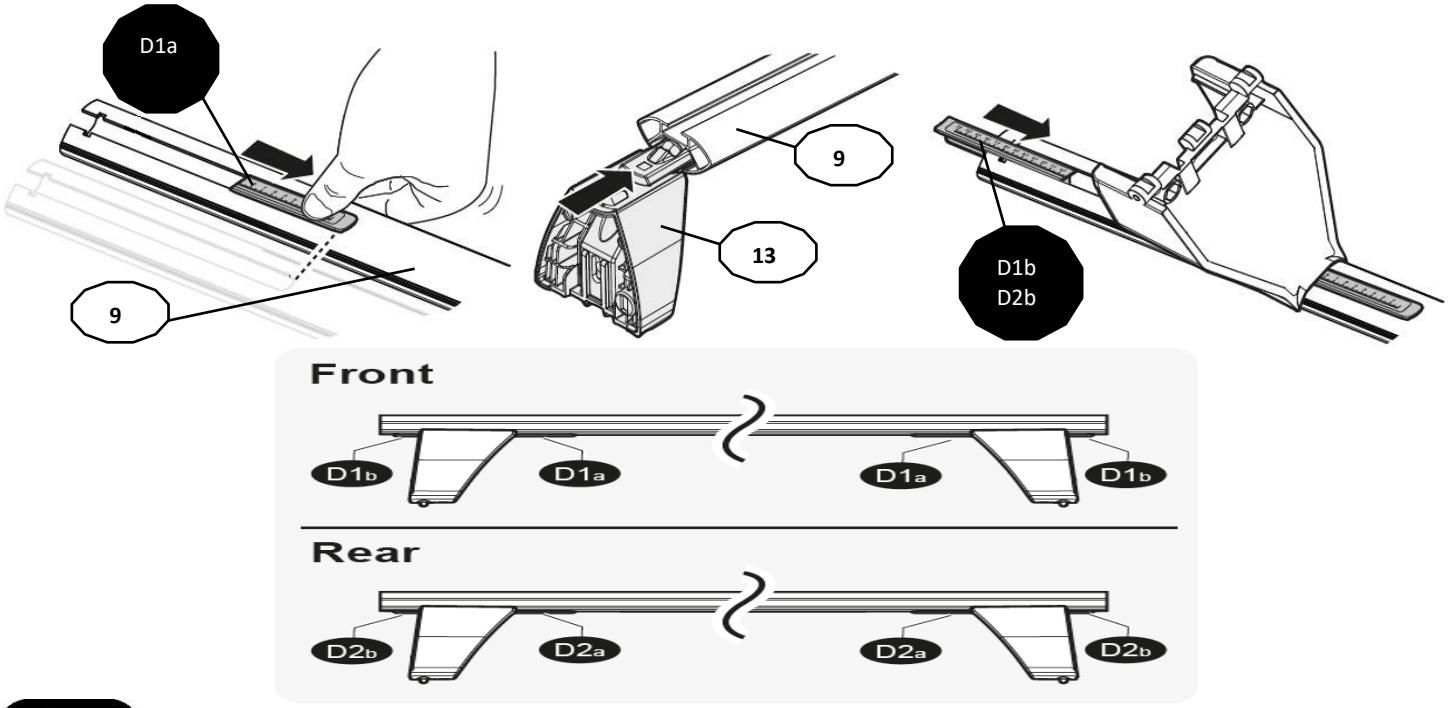

3

x4

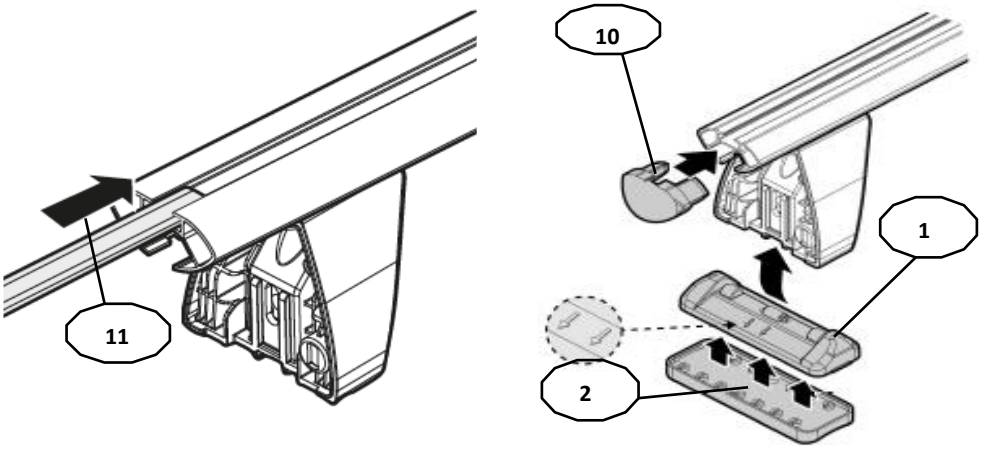

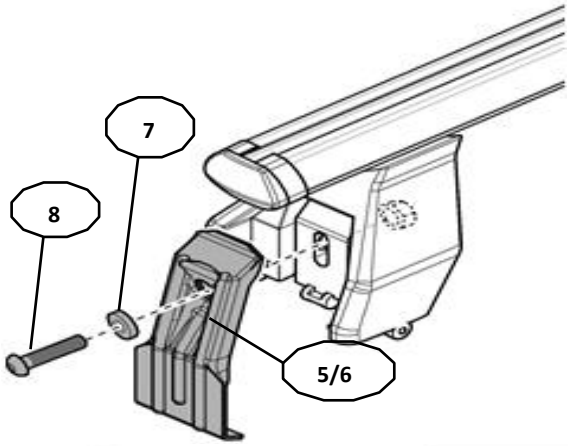

Front	Rear
5	6

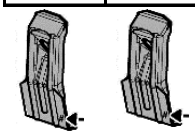

26	18R
2X	2X

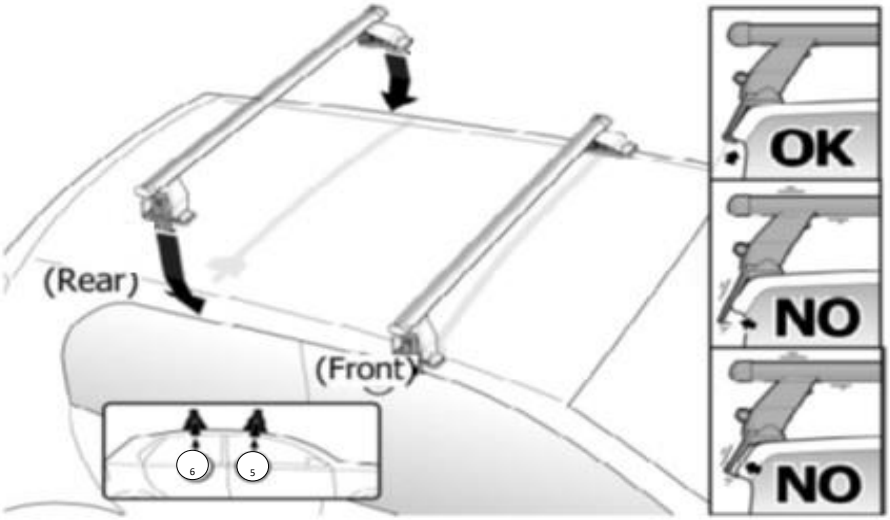

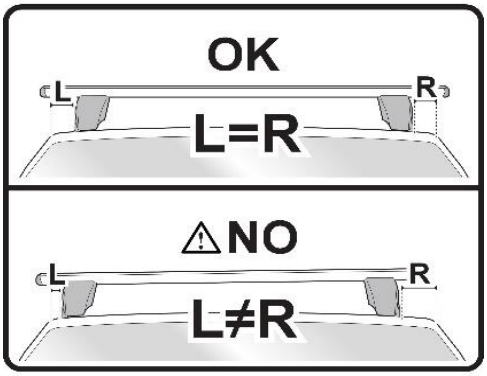

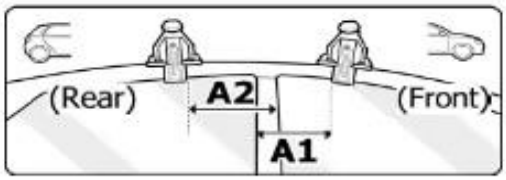

OR

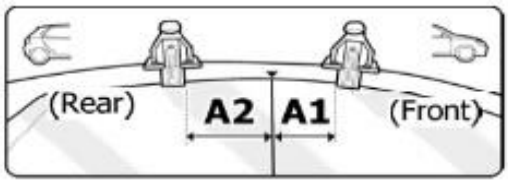

MANUFACTURER	MODEL CAR	DOORS	MODEL YEAR	A1 cm	A2 cm	A1 in	A2 in
ACURA	*TLX*	*4*	*15>19*	*18*	*45*	*7,1*	*17,7*
FORD	*Fiesta V*	*3*	*02>08*	*48*	*28*	*18,9*	*11,0*

X = predisposizione originale /original arrangement